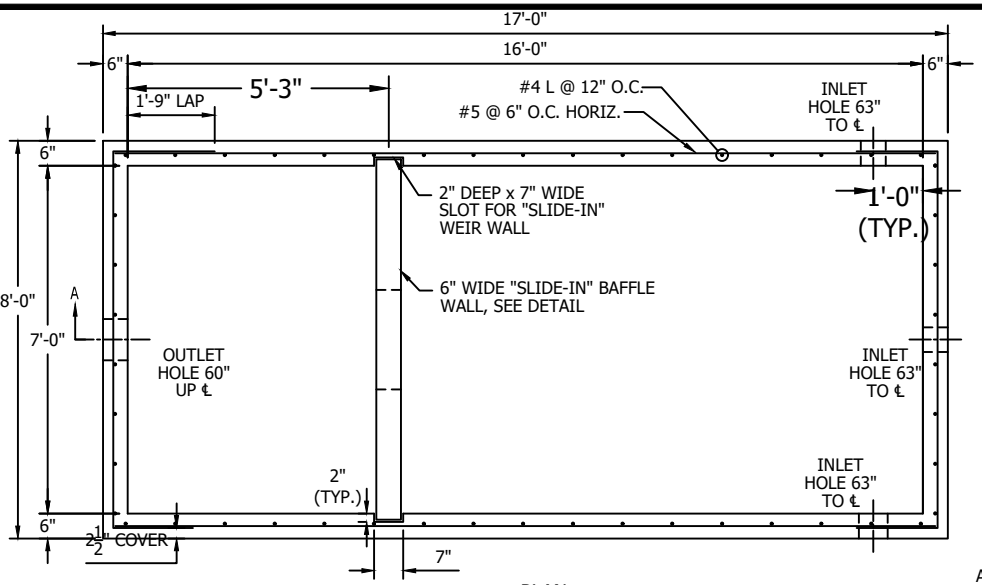

PLAN
1/4" = 1'-0"

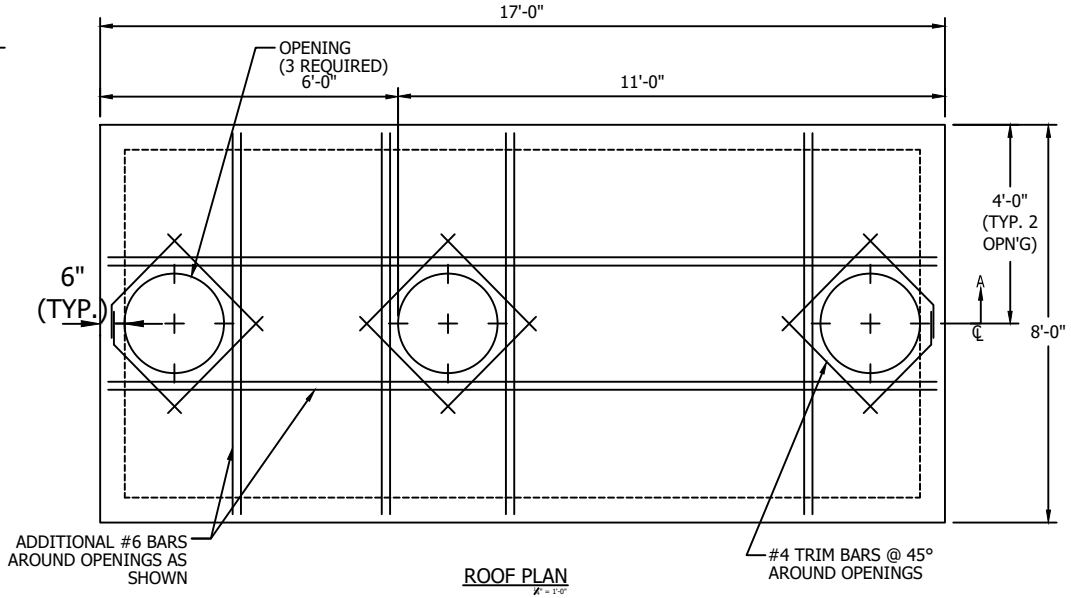

ROOF PLAN
1/4" = 1'-0"

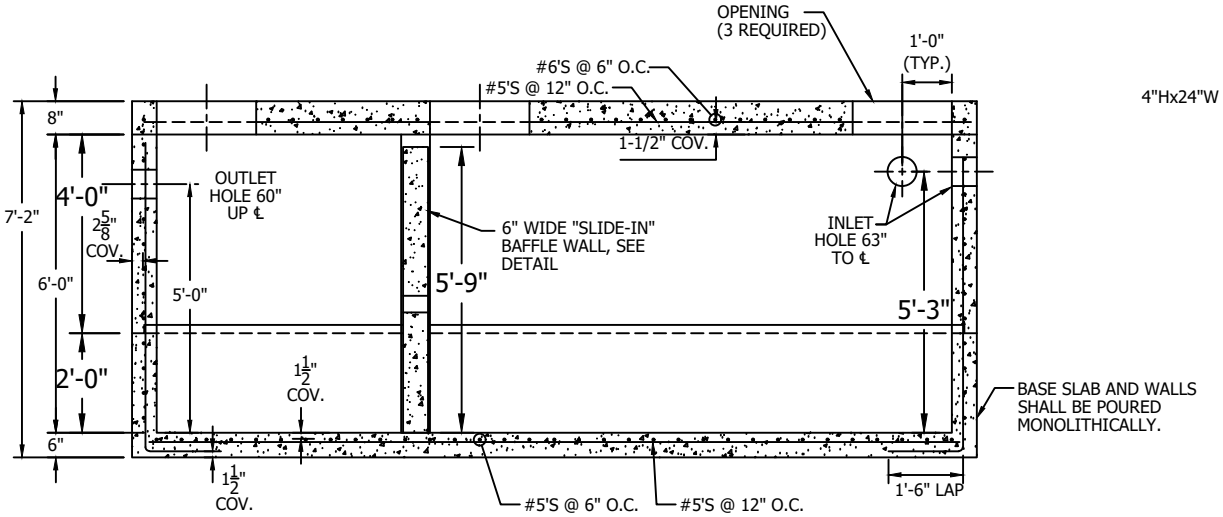

SECTION A-A
1/4" = 1'-0"

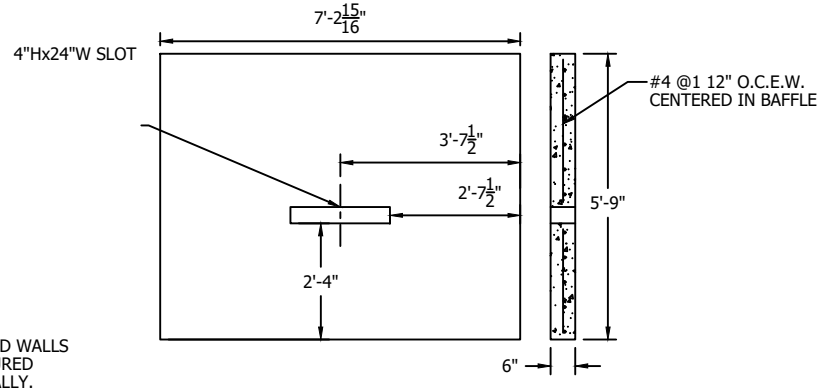

BAFFLE WALL DETAIL
1/4" = 1'-0"

TANK REQUIREMENT CHECKLIST:		
PIPE SIZE -	INLET _____ OUTLET _____	
PIPE TO CONCRETE CONNECTOR -	□ HOLE THRU □ BOOT	
COATING -	□ YES;	□ BITUMINOUS □ EPOXY
	□ NO	
ROOF OPENING -	□ 24" Dia.;	□ 30" Dia.

NOTES:

1) DESIGN IN ACCORDANCE WITH ASTM C890 AND ACI 318.
2) LIVE LOAD = A-16 (AASHTO HS20).
3) EARTH FILL FOR DESIGN = 3'.
4) WATER TABLE ASSUMED AT 36" BELOW GRADE.
5) CONCRETE STRENGTH = 5,000 PSI.
6) REINFORCING STEEL - ASTM A615, GRADE 60.
7) WELDED WIRE REINFORCING - ASTM A1064, GRADE 65 SMOOTH.
8) OPENINGS, SIZE AND LOCATION, AS REQUIRED:
   8.1) PROVIDE ADDITIONAL REINFORCING AROUND OPENINGS <12". EQUAL TO THE BARS INTERRUPTED BY THE OPENING, ½ EACH SIDE AND IN THE SAME PLANE.
   8.2) ADD #4 DIAGONAL TRIM BARS AT OPENINGS.
9) MATERIALS AND MANUFACTURING SHALL CONFORM TO ASTM C1227.
10) LIFTING AND HANDLING SHALL CONFORM TO OSHA STANDARDS.

NOTE FOR CONTRACTOR:
PLEASE INDICATE LOCATION OF INLET PIPE PRIOR TO RELEASE OF PRODUCTION

WEIGHTS:		
BASE & RISER	=	17,185#
RISER	=	14,220#
ROOF SLAB	=	13,500#
BAFFLE WALL	=	3,090#
TOTAL	=	48,000#

A&R CONCRETE PRODUCTS
276 Clove Road
Salisbury Mills, New York, 12577
www.arconcrete.com
845-562-0640

SEPTIC TANK / GREASE TRAP
4000 GALLONS

DATE:	9/1/2022
REV.:	---
DWN.BY:	A&R LLC
CONTRACTOR:	---
DWG. NO.:	TANK4000